GLOBAL FINISHING SOLUTIONS

Automotive Refinish Paint Booths

Service & Operations Manual

Document Number: 239-062 rev 4
Publication date 08/27/2020

Read and keep this manual for future reference. All personnel operating the equipment described in this manual should review and understand all instructions before use.

Table of Contents

Introduction 4
About Global Finishing Solutions LLC 4
Contacting Global Finishing Solutions 4
Target audience 4
Conventions used in this manual 5
Safety notices 5
Information notices 5

General safety 6

Booth safety 8

Safety features 10

Booth Overview 11
Air management 11
Air velocity 11
Downdraft airflow 11
Semi-downdraft airflow 12
Air pressure balance 12
Booth components 13
Doors 13
Curtains 13
Filters 13
Exhaust fan(s) 14
Lighting 14
Operator interface terminal 14

Service and maintenance 15
Maintenance schedule 15
Daily maintenance 16
Inspect filters and replace as needed 16
Remove overspray buildup 24
Check operation of product doors 25
Check lights 25
Monthly maintenance 26
Clean booth components 26
Inspect and clean the air heater 27
Inspect and clean the exhaust fan 27
Yearly maintenance 29
If applicable: Inspect and clean an air heater with a standard burner 29
If applicable: Inspect and clean an air heater with a Low NOx burner 30
If applicable: Inspect the cycle damper (BT and GUL) 31
If applicable: Inspect the recirc and intake air dampers (SpaceSaver) 31
If applicable: Test for valve leaks 31
If applicable: Check the gas pressure switches 33
General service procedures 36
Replace a defective bulb 36
Replace the protective light covering 36

Adjust belt tension 38
Replace fan belts 39
Check V-belt drive alignment 39
V-belt drive considerations 41
Replace fan bearings (SpaceSaver) 41
Common causes of excessive vibration 41
Air heater service procedures 42
Check air heater belt tension (SpaceSaver) 42
Reset the air heater flame safety control 43
Reset the gas pressure switches 43
Reset the high temperature limit switch 43

Spare parts and accessories 44
Consumable parts 44
Accessories 45

Control panel 49

Introduction

About Global Finishing Solutions LLC

Leading the Industry in Paint Booth and Finishing System Technology

With decades of experience, Global Finishing Solutions is the leading manufacturer of paint booths and finishing systems for many industries, including automotive refinish, aerospace and defense, industrial manufacturing, woodworking, and large equipment. By combining high-quality components, strong relationships with paint manufacturers, and our experienced distribution network, GFS provides the best equipment and support to set your business up for success.

Contacting Global Finishing Solutions

General information

- Toll-free: 800-848-8738
- Fax: 715-597-2193
- Email: info@globalfinishing.com
- Online: www.globalfinishing.com

Technical support

- Toll-free: 800-848-8738
- Fax: 715-597-8818
- Email: techservices@globalfinishing.com

Parts and filters

- Toll-free: 800-848-8738
- Fax: 888-338-4584
- Email: parts@globalfinishing.com

Target audience

This document is intended for use by trained, experienced paint booth installers and maintenance technicians. If you have questions about the installation procedure described in this manual, contact GFS as described above.

Conventions used in this manual

This section describes how information is presented, organized, and referenced within this manual.

Safety notices

This manual uses the following standards to identify conditions related to safety hazards and equipment damage.

Table 1. Safety notices

Symbol	Description
DANGER	Indicates an imminent hazard that will result in death.
WARNING	Indicates a hazard that can result in serious personal injury or death.
CAUTION	Indicates a hazard that can result in personal injury.
NOTICE	Indicates a situation that can result in equipment or property damage, but poses no risk of personal injury.

Information notices

In addition to the safety notices described above, this manual uses a boldface keyword to identify certain other types of information.

Table 2. Information notices

Keyword	Description
NOTE	Denotes general information that provides additional context or guidance.
Important	Denotes information to which you should pay special attention.
Reference	Directs you to related content in a separate document.
Prerequisites	Specifies other tasks that must be completed or conditions that must exist before you perform the current task.
Scope	Describes limitations to the current task or conditions under which the task applies or does not apply to the procedure.

General safety

Follow all safety guidelines when assembling, operating, or servicing this product.

WARNING
There are inherent hazards associated with the operation and service of this equipment. For your personal safety, observe all safety information. Failure to observe these safety practices can result in personal injury or death.

WARNING
Operation and maintenance of this product must be performed properly by qualified personnel who observe the warnings in all documentation and notes provided with and on the product.

WARNING
Follow all general standards for installation and safety for work on installations. Follow all good practices for the proper use of lifting tackle and equipment. The use of protective equipment such as safety goggles and protective footwear must be considered.

WARNING
All persons who will operate, service, inspect, or otherwise handle this product must read and understand the safe operating practices, safety precautions, and warning messages in this documentation.

WARNING
Comply with OSHA guidelines and with all applicable local electrical, safety, and fire codes and standards.

WARNING
All field wiring provided must comply with local codes or, in the absence of local codes, the National Electrical Code (NFPA 70). Article 516 covers applicable of flammable and combustible materials.

WARNING
Electrical installation should be completed by a qualified electrician. Installation must meet all applicable national, state, and local electrical codes.

WARNING
Ensure that all electrical components are grounded to a central ground.

WARNING
Disconnect and lock out the main electrical service before installing, adjusting, or servicing the product.

WARNING
Lockout the main gas shutoff valve before maintenance or inspection of the air heater.

WARNING
Guards and covers that prevent contact with electrically energized or moving parts are required and must not be removed or left open during operation.

WARNING
Local fire and building codes require fire protection. Check with local inspector authorities for requirements.

CAUTION
Read and save these instructions before attempting to assemble, install, operate, or maintain the product described. Protect yourself and others by observing all safety information. Failure to comply with instructions could result in personal injury and/or property damage. Retain these instructions for future reference.

CAUTION
This manual contains statements that relate to worker safety. Read this manual thoroughly and comply as directed. Operate this equipment in accordance with the guidelines set forth in this manual. It is impossible to list all potential hazards of this equipment. Instruct all personnel involved with this equipment in the safe conduct and operation of the system. GFS recommends that only qualified personnel operate and maintain this equipment.

CAUTION
Safety signs, panels, and labels that are normally affixed to the product must be replaced immediately if illegible or missing.

CAUTION
New or replacement parts that are installed during repair or maintenance must include all safety signs, panels, and labels as specified by the manufacturer. These must be affixed to the new or replacement parts as specified by the manufacturer.

CAUTION
Where applicable, use earplugs or take other safety measures for hearing protection.

NOTICE
The product must be installed and serviced only by a trained, qualified service technician. Incorrect installation may void the warranty.

NOTICE
If you have questions about the warranty, please contact your distributor prior to contacting GFS.

Booth safety

DANGER
Ceiling panel load capacity for installation and maintenance: You must use temporary platforms that span at least two structural frames for maintenance. **Do not walk on or apply any pressure to lights or explosion (deflagration) relief panels.**

WARNING
All equipment must be operated and maintained in accordance with local, state, and federal (OSHA) requirements governing occupational safety, fire protection, and booth operations. Operators must read and understand GFS and included independent equipment and/or component manufacturer's instructions prior to use. **Disclaimer:** GFS is not responsible for any injury, illness, or property damage that results from not abiding by local, state, or federal (OSHA) requirements that govern occupational safety, fire protection, spray booth, and oven operations. GFS is also not responsible for any injury, illness, or property damage that is the result of not adhering to GFS and/or independent equipment/component operating, service, maintenance, and/or installation requirement's or directives.

WARNING
Do not allow overspray to accumulate on the inside of the paint booth walls. When overspray accumulates, remove it as soon as possible to prevent a possible fire hazard. Use a non-ferrous, non-sparking scraper to eliminate any possibilities of igniting combustible material.

WARNING
Do not leave piles of paint sweepings in the booth as it creates a possible fire hazard.

WARNING
Treat used filters and any other paint-contaminated items as flammable products and dispose of them safely.

WARNING
Improper disposal of used filters may cause spontaneous combustion. You must consult local authorities for proper storage and disposal requirements. Guidelines include:

- Immediately remove all filters from the booth.
- Discard filters to a safe, detached location, place them in a non-combustible container with tight-fitting lid, or place them in a water-filled metal container to prevent a possible fire hazard.
- Disposal varies depending on the type of paint that is being captured. Consult local authorities for storage and disposal requirements.

WARNING
Duct the exhaust air from the fan away from the working environment to the outdoors. Do not operate the booth unless exhaust has been ducted properly.

WARNING
Isolate the outdoor vent from air-conditioning intakes, windows, and any other equipment that may re-circulate the exhaust indoors.

WARNING
Turn on the exhaust fan before using the spray booth. Ensure that the exhaust fan is operating correctly before entering the booth.

WARNING
Check local codes to see if a booth interlock is required. A booth interlock prevents the spray devices from operating unless the booth fan is operating.

WARNING
Some spray activities may require the use of respiratory protection.

WARNING
Use an OSHA-approved paint spray respirator when spraying in the booth.

WARNING
This equipment is designed for the removal of particulate matter only. Reduction of volatile organic compounds (VOCs) requires either coating reformulation or optional, additional equipment.

WARNING
Fall Hazard: Do not walk or drive over the pit without the bar grating in place.

WARNING
Fall Hazard: Do not drive over the bar grating in a vehicle that exceeds the maximum wheel load listed in the Bar Grating Specification table on the Pit Details page of the Design Drawings.

WARNING
Fall Hazard: Do not remove bar grating from the pit unless authorized to do so. The pit presents a fall hazard when the bar grating is not installed.

CAUTION
Become familiar with all controls before operating or servicing this booth.

CAUTION
Proper door alignment is critical to the operation of the booth. Ensure that there is equal space around the doors. Move the bottom of the door jamb to the left or right or in and out until the doors are sealed and plumb.

Safety features

For operator safety, compressed air may only enter the spray gun when the booth is in Spray mode, the fans are operating, light covers are in place, airflow switches are satisfied, and the doors are closed. The following safety features are included with every booth:

- **Fire Suppression Interlock:** Two types of fire protection interlock are provided. Type 1 is typically used with a dry chemical type system that will shut down the ventilation system in the event of a fire or fault. Type 2 interlock is typically used on a wet system and will lock out the spray permissive signal to prevent any spraying, but keep the ventilation system in operation. Local Codes and AHJ must provide guidance on the interlock type.
- **Lights:** All lights are inside accessible for maintenance.
- **Lighting Lens Safety Interlock:** A magnetic actuated switch mounted in the light fixture provides a safety interlock. When installed properly, the switch will prove that the lens cover is properly installed and in place. All lights are interlocked through a series circuit that will not allow for spray activity of the circuit. The light fixture remains illuminated in the fault condition.
- **Exhaust Air Proving Switch:** Exhaust air proving switch monitors differential air pressure of the exhaust fan. The switch will activate when the fan is in operation and proving the minimum amount of differential air pressure.
- **Air Solenoid Valve (ASV):** The air solenoid valve is located in the compressed air supply line to the spray equipment. All safety features listed must be functioning and not faulted before the air solenoid valve is activated.

Booths equipped with an air heater include additional safety features:

Booth Overview

Air management

For the best operating environment, GFS automotive refinish paint booths are designed to help create and maintain optimal air velocity, airflow, and air pressure balance.

Use the information provided below to help you control and maintain your booth for optimal airflow.

Air velocity

Air velocity (the distance traveled per unit of time) is usually expressed in feet per minute (FPM). By multiplying the air velocity by the cross section area, you can determine the air volume flowing past a point in the booth per unit of time.

Downdraft airflow

Generally accepted as the best airflow style, downdraft booths do an excellent job controlling overspray and contamination. Air enters the booth through a filtered ceiling plenum, flows vertically over the product, and into the filtered exhaust pit in the floor. Airflow is also affected by the type of air heater. (Figure 1)

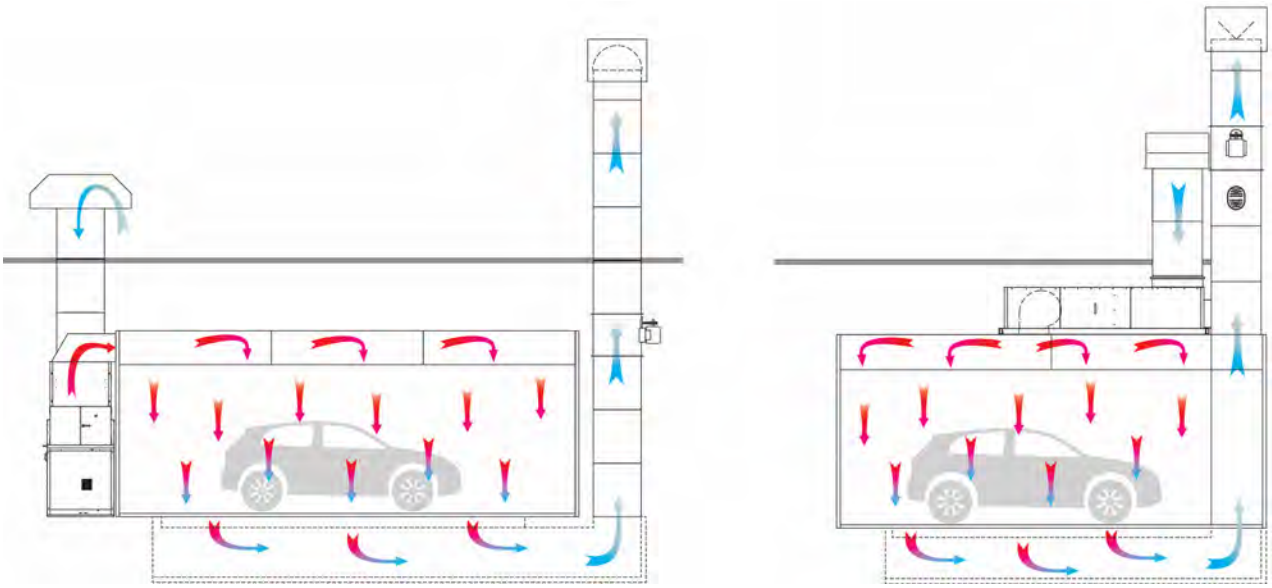

Figure 1. Airflow with BT or GUL air heater (left) and SpaceSaver air heater (right)

The following models may use this airflow:

- Ultra XP1, XD, XS, and XL
- Performer XP1 and XD

- Ultra XD and XS CTOF

Semi-downdraft airflow

The semi-downdraft booth is a hybrid, combining features of both crossdraft and downdraft booths. Air is introduced to the working area through the ceiling in the first 25 to 30 percent of the booth. It is then pulled across the working area, over the product, and into the filtered exhaust chamber at the rear of the booth. Airflow is also affected by the type of air heater (Figure 2).

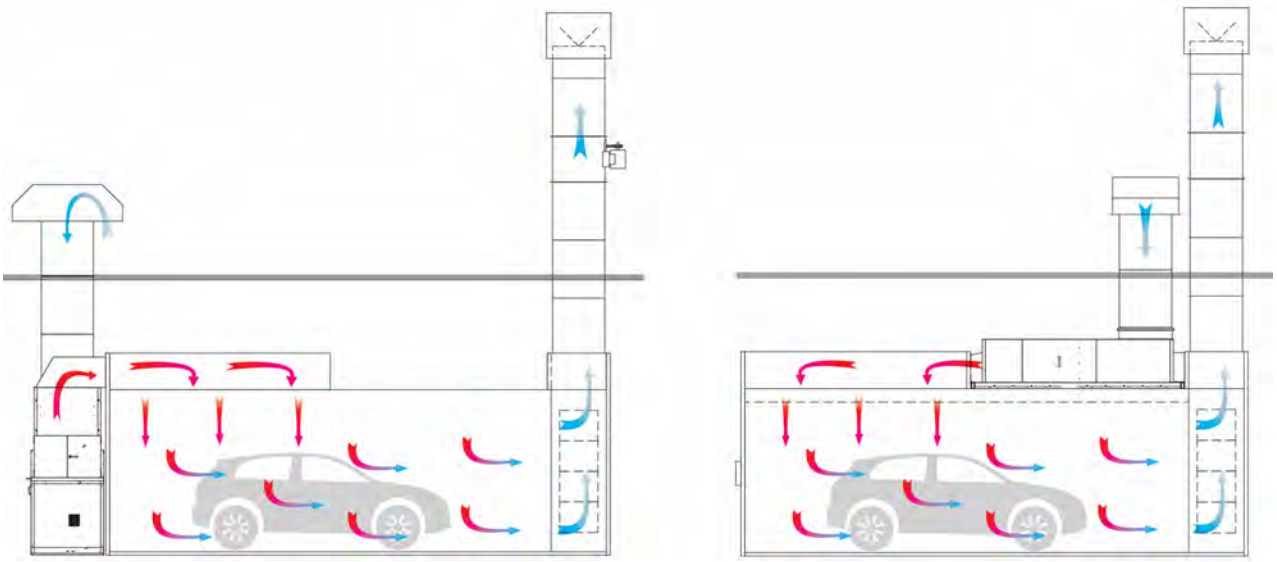

Figure 2. Airflow with BT air heater (left) and SpaceSaver air heater (right)

The following models may use this airflow:

- Ultra XD and XS
- Performer XD and ES
- Ultra XD and XS CTOF

Air pressure balance

Air pressure balance is the difference (in either a negative or positive value) between the inside of paint booth work zone and the area around the booth. For peak performance, air pressure should be as close as possible to zero pressure.

Pressurized booths have an Auto Balance System or manual balance system (CTOF with frontal curtains) that:

- Helps keep contaminants out of the booth.
- Provides a streamlined airflow without turbulence.
- Supports even temperatures in the painting area.

Booth components

This section describes the main components of your booth.

Doors

Paint booths can have two types of doors:

- Product doors that allow you to move parts and equipment in and out of the booth
- Personnel doors that allow people to enter and exit the booth

In pressurized booths, the doors are monitored to detect when the door is open or closed. If a product door is open, you cannot use the spray gun. You can open a personnel door during Spray mode for up to ten seconds without stopping the spray gun.

Opening any door immediately disables the air balancing system. When all doors are closed, the system automatically resets.

Curtains

CTOF Booths may have two types of curtains:

- Curtains on the front of the booth (frontal curtains) that function similarly to a product door
- Curtains that separate the booth's work bays (in dual-bay configurations)

An Auto Balance System is not effective for maintaining air pressure balance or providing consistent airflow and temperatures in a CTOF booth with curtains. Pressurized CTOF booths with frontal curtains use a manual balance system so the exhaust motor's speed can be adjusted manually.

Different modes of operation require different speed settings. Motor speeds will vary based on airflow preferences and must be increased as filters load.

NOTE
In a booth with a manual balance system, opening the curtains does not disable the spray gun.

Filters

Filters are critical to the booth's operation:

- **Intake filters** help prevent dust and particulates from entering the booth.
- **Exhaust filters or exhaust filter media** capture and retain overspray, preventing paint particles from escaping into the environment.
- **Air heater filters** help prevent dust and particulates from entering the air heater.

To ensure that the booth operates properly, you must inspect and replace filters regularly. For more information, see "Inspect filters and replace as needed" (page 16).

Exhaust fan(s)

The exhaust fan pulls air out of the booth and vents it to the outside.

NOTE
Depending on the size of your booth, it may have more than one exhaust fan.

CAUTION
Damage in shipping and handling or poor installation of the unit may upset the fan's balance. A fan blade that is not properly balanced can lead to excessive vibration, causing undue wear on the entire unit.

All GFS fan assemblies are statically and dynamically balanced to Balance Quality Grade G6.3. Each fan is factory run-tested for vibration in accordance with ANSI/ AMCA 204-96 "Balance Quality and Vibration Levels for Fans" to Fan Application Category BV-3, to the following peak velocity values, filter-in, at the fan test speed:

- **Rigidly Mtd.** (in/sec): 0.15
- **Flexibly Mtd.** (in/sec): 0.20

Vibration cannot be guaranteed under field conditions due to mounting and installation variables. If vibration is excessive, shut down the fan and determine the cause. See "Common causes of excessive vibration" (page 41).

Lighting

The light fixtures are designed for locations exposed to volatile flammable liquids or gases. An interlocking safety switch disables spray-gun operation if any of the light fixture covers are not properly closed.

Figure 3. Switch location

Operator interface terminal

The operator interface terminal is the screen or pushbutton controls the operator uses to control the booth. Starting the booth, painting, curing, stopping, and shutting down the booth are described in the control panel operator manual for your booth model.

Service and maintenance

Maintenance schedule

The frequency of the following maintenance checks depend upon the material being sprayed (amount and kind). The booth operators and maintenance technicians should perform these checks at regular intervals to reduce fire hazards, maintain booth efficiency, prevent freshly painted objects from becoming blemished, and hinder booth corrosion and wear. Adjust the frequency of the checks according to local guidelines and actual usage.

See “Daily maintenance” (page 16), “Monthly maintenance” (page 26), “Yearly maintenance” (page 29), and “General service procedures” (page 36) for full service procedures.

Items to Be Inspected and/or Cleaned	Daily	Monthly	Yearly
Check intake or exhaust filters and replace if needed.	X		
Check air heater filters and replace if needed.	X		
If applicable: Check the combustion blower filter on the Low NOx burner and replace if needed.	X		
Remove overspray buildup from ceiling, walls, floor, and doors/ curtains.	X		
Check operation of product doors.	X		
Check lights and replace defective bulbs if needed. **NOTE** Replace Lens Protector or Booth Shield on light fixtures as needed.	X		
Clean intake duct, discharge duct, intake plenum, exhaust plenum, and exhaust ductwork.		X	
Inspect and clean the air heater, including the fan inlet and intake areas, fan, wheels, and other moving parts.		X	
If applicable: Check air heater belt tension and V-belt alignment.		X	
Inspect and clean the exhaust fan, including the fan inlet and intake areas.		X	
If applicable: Check the bearings for excessive play (replace if necessary) and check and adjust fan belt tension.		X	
Inspect and clean the air heater.			X
Ensure that the recirc/cycle damper can rotate freely.			X
If applicable: Perform valve leak test check on external sealing.			X
If applicable: Check the low-pressure and high-pressure gas switch.			X

Daily maintenance

This section contains tasks that should be performed every day.

Inspect filters and replace as needed

FOLLOW GFS' RECOMMENDED REPLACEMENT PROGRAM FOR FILTERS. Use GFS replacement filters for the plenum, the air heater, intake, exhaust, and other components as needed. GFS filters are designed to provide high-efficiency particulate removal and will maintain balanced airflow during the life of the filter.

All booths use these types of filters: air heater, intake, and exhaust.

The buildup of paint overspray on the exhaust filters must be monitored via an effective inspection program.

Table 3. Filter replacement schedule

Filter type	Visual inspection frequency	Replacement frequency[1]
Air heater filters	At least every two weeks	Every 160 to 180 hours of operation
Intake filters	Daily	Every 1500 to 1800 hours of operation
Exhaust filters	Daily	Every 50 to 70 paint jobs

[1]Change filters immediately if they become saturated sooner than the recommended replacement interval.

NOTE
Some weather conditions (e.g., smog, fog, frost, etc.) produce atmospheric dust concentrations that may be much higher than normal. In such conditions, intake filters and air heater pre-filters may become saturated in a short time.

All filters should fit tightly in filter frames. If filters do not make a proper seal with the filter frames, unfiltered air will pass to the next part of the system. Take extreme care to make sure intake filters are installed properly. Improperly installed intake filters will allow unfiltered air into the booth's work area. This unfiltered air may deposit visible dirt particles on the word surface and item being painted.

Keep a set of replacement filters on hand. For information on ordering filters, see “Consumable parts” on page 21.

To ensure that maintenance procedures are followed correctly, have your local authorized and factory-trained GFS distributor maintain your refinish system.

WARNING
Treat used filters and any other paint-contaminated items as flammable products and dispose of them safely.

WARNING
Improper disposal of used filters may cause spontaneous combustion. You must consult local authorities for proper storage and disposal requirements. Guidelines include:

- Immediately remove all filters from the booth.
- Discard filters to a safe, detached location, place them in a non-combustible container with tight-fitting lid, or place them in a water-filled metal container to prevent a possible fire hazard.
- Disposal varies depending on the type of paint that is being captured. Consult local authorities for storage and disposal requirements.

Replace the exhaust filter media in a downdraft booth

NOTE
Perform this task at recommended intervals (see “Inspect filters and replace as needed” (page 16)).

NOTE
Verify that the correct replacement filters are available before removing used filter media. Before servicing, remove and lockout/tagout the main electrical source.

NOTE
The exhaust filter media is located in the pit or raised basement.

1. Remove the bar grating from the pit or raised basement and set it aside.

   WARNING
   Do not walk or drive over the pit or basement while the bar grating is removed.

2. Remove and safely dispose of used filter media.

   WARNING
   Treat used filters and any other paint-contaminated items as flammable products and dispose of them safely.

3. Obtain the replacement exhaust filter media.
   a. Place the roll at one end of the pit or raised basement with the **air leaving (dense) side of the filter media facing down**.
   b. Roll out the filter media along the length of the pit.
   c. Cut off the excess filter media when you reach the opposite end of the pit.

4. Replace the bar grating on top of the pit or raised basement.

   NOTE
   Grating must be installed with cross rods on top.

   NOTE
   You can walk and drive over the pit or raised basement after the bar grating is installed.

   WARNING
   Fall Hazard: Do not drive over the bar grating in a vehicle that exceeds the maximum wheel load listed in the Bar Grating Specification table on the Pit Details page of the Design Drawings.

Replace the exhaust filters in a semi-downdraft booth

The exhaust filters are located in the filter racks of the exhaust bridge chamber.

1. Remove and safely dispose of used filter media.

   WARNING
   Treat used filters and any other paint-contaminated items as flammable products and dispose of them safely.

2. Place new filters onto the filter grids. Orient the filters so that the wave side is facing you.

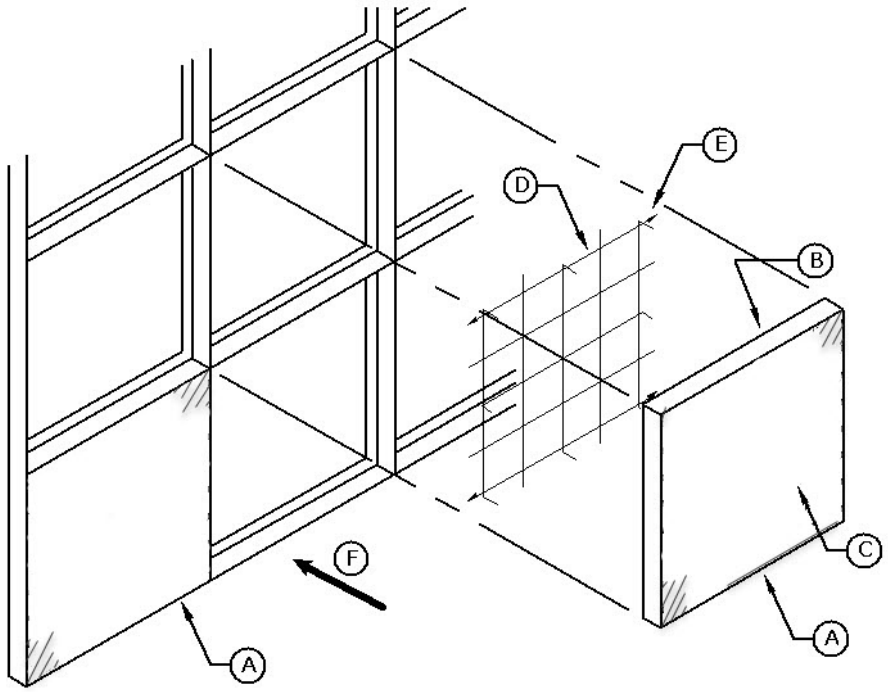

A: *Exhaust filter*
B: *Air-leaving side (dense side of filter)*
C: *Air-entering side*
D: *Filter grid*
E: *Rubber tip on grid corner*
F: *Airflow*

Replace the intake filters

NOTE
Perform this task at recommended intervals (see “Inspect filters and replace as needed” (page 16)) and any time visual inspection or booth performance indicates that the filter needs to be replaced.

NOTE
Verify that the correct replacement filters are available before removing used filter media. Before servicing, remove and lockout/tagout the main electrical source.

The intake filters are inserted into the filter racks in the ceiling of each bay.

Figure 4. Filters in booth ceiling

Perform these steps to replace the intake filters.

NOTE
Work from one side of the filter grid to the other.

1. Use a ladder to access the filter clips on the appropriate section of the filter grid.
2. Use a drill with socket wrench bit or a socket wrench to loosen one of the outer corner filter clips.

3. Once loosened, twist the clip 180 degrees to free the filter grid.
4. Repeat steps 2 and 3 for the outer filter clip on the opposite side of the grid, and then for the middle clip.
5. From the ladder, support the center of the filter grid and lower the grid until it hangs vertically.

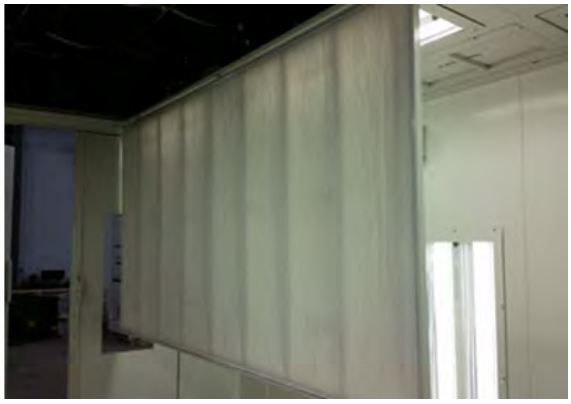

6. Remove the filter rack from the booth ceiling and place it on two sawhorses, with the flat side of the filter rack facing down.

NOTE
You can replace more than one intake filter at a time. The image above shows two filter racks.

7. Remove and safely dispose of used filter media.

WARNING
Treat used filters and any other paint-contaminated items as flammable products and dispose of them safely.

8. Place fresh filter media on top of the filter rack with the writing on the filter media facing down.
9. Use a filter-insertion tool (metal pizza cutter) to push the filter media into the slot all around the perimeter.

10. Reinstall the filter rack in the ceiling of the booth.

Replace air heater filters (GUL and BT)

WARNING
Before servicing, lockout/tagout the air heater, including the main electrical service and the main gas supply.

Perform these steps to replace the air heater filters:

1. On the air heater, locate the panel that houses the filter.

2. Remove the four wing-head thumb screws.

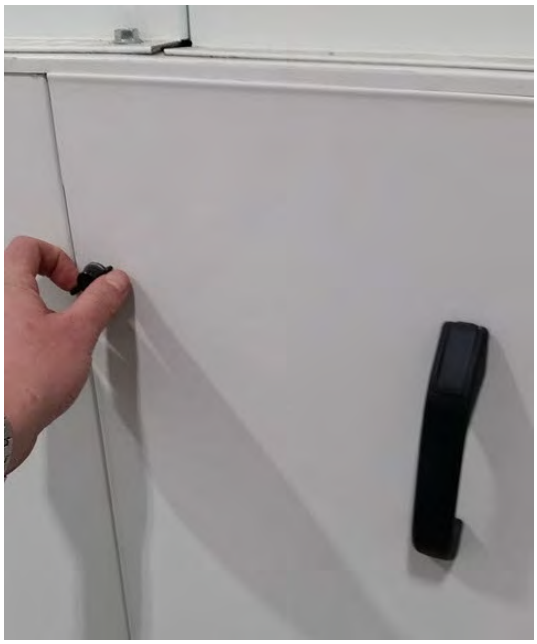

3. Lift the panel using the handle to remove and gain access to the filters.
4. Using both hands, pull the used filter by its frame along the track and out of the unit.

   Remove the remaining filters in the same manner as the first filter.

   WARNING
   Treat used filters and any other paint-contaminated items as flammable products and dispose of them safely.

   NOTE
   Pay attention to the orientation of the filter inside the unit.
5. Making sure the filter is oriented the same way, slide the new GFS pocket filters along the track into the air heater.
6. Reattach the panel and secure it with the four wing-head thumb screws.

Replace air heater filters (SpaceSaver)

WARNING
Before servicing, lockout/tagout the air heater, including the main electrical service and the main gas supply.

CAUTION
SpaceSaver air heaters are located on the booth's roof and must be accessed using a scissor lift or ladder. Follow safety guidelines for harnesses and heights.

1. On the roof of your paint booth, survey the side of the air heater with various access panels. The access panel to the filters is behind the gas train access panel.

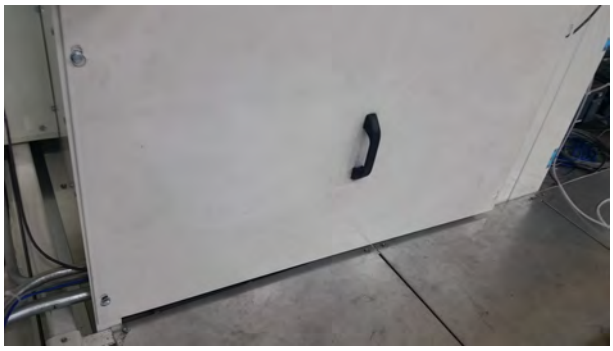

2. If necessary, loosen the bolts (1/2-inch hex bolt head) securing the gas train access panel, and lift panel out of place.
3. The filter access panel is located within the chamber. Remove the six bolts (1/2-inch hex bolt heads) to gain access.

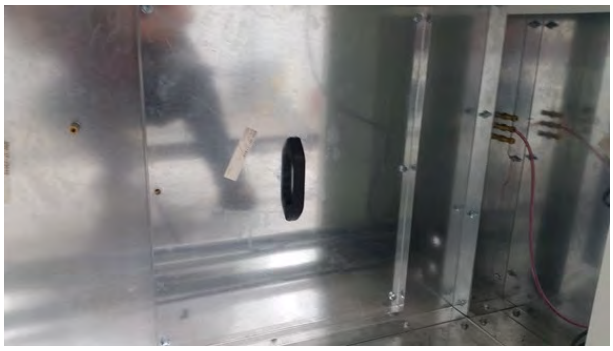

4. Using both hands, pull the used filter by its frame along the track and out of the unit.

   Remove the remaining filters in the same manner as the first filter.

   WARNING
   Treat used filters and any other paint-contaminated items as flammable products and dispose of them safely.

   NOTE
   Pay attention to the orientation of the filter inside the unit.

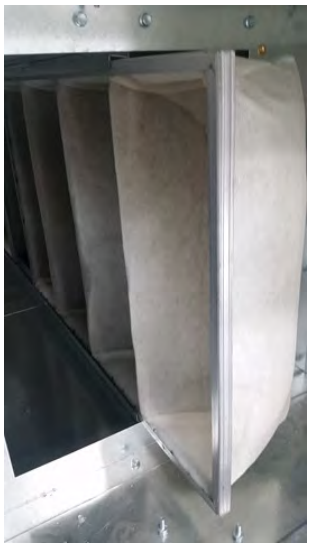

5. Making sure the filter is oriented the same way, slide the new GFS pocket filters along the track into the air heater.
6. Replace filter access panel, and then replace the gas train access panel.

If applicable: Replace combustion blower filters

Scope: This procedure applies only to air heaters with Low NOx burners.

WARNING
Before servicing, lockout/tagout the air heater, including the main electrical service and the main gas supply.

1. Locate the gas train and the box that houses the combustion blower.
2. Loosen the 8 mm bolts securing the filter frame to the side of the combustion blower box and lift the filter frame grate out of place.
3. Remove the used filter pad.
4. Making sure the replacement filter is oriented the same way, insert the new combustion blower filter (GFS part number ADV-4MW-FMI1116).
5. Close the filter frame grate and tighten the bolts.

Remove overspray buildup

WARNING
Do not allow overspray to accumulate on the inside of the paint booth walls. When overspray accumulates, remove it as soon as possible to prevent a possible fire hazard. Use a non-ferrous, non-sparking scraper to eliminate any possibilities of igniting combustible material.

1. Remove overspray buildup from the following locations:
   - Ceiling
   - Walls

- Floor

  NOTE
  If you use protective booth paper or coating, replace it when it becomes worn or dirty.

- Doors/curtains

  NOTE
  Check to make sure the door opens and latches without difficulty.

2. Visually inspect all other surfaces for accumulated buildup; remove overspray or clean as required.

Check operation of product doors

NOTE
Perform this task for each product and personnel door installed in the booth.

1. Remove any overspray from the door or clean as required.
2. Check that the door swings freely.
3. Check that the latch holds the door in place.
4. Check that the seal on the door is in good condition.

Check lights

Inspect the lights to look for individual lights that are dim or burned out, and to evaluate overall light quality:

- **If a specific light bulb is burned out or is noticeably dimmer than the other bulbs:** Follow the instructions in “Replace a defective bulb” (page 36) to replace the affected bulb.
- **If the overall light quality is diminished:** Follow the instructions in “Replace the protective light covering” (page 36) to replace the protective layer or clean the light.

Monthly maintenance

This section contains tasks that should be performed on a monthly basis. Increase or decrease frequency as needed for specific operating conditions and use of booth.

Clean booth components

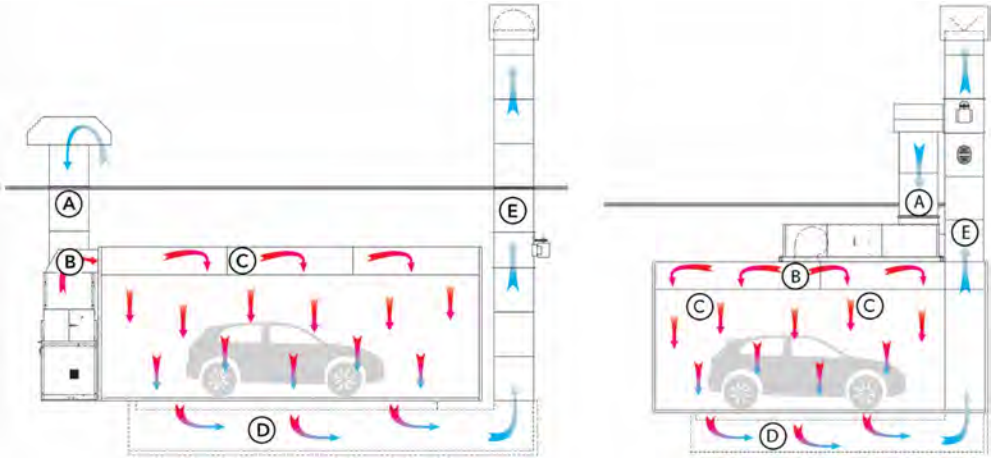

A: *Intake Duct*
B: *Discharge duct*
C: *Intake plenum*
D: *Exhaust plenum (confined space)*
E: *Exhaust ductwork*

Figure 5. Downdraft booth components with BT or GUL air heater (left) and SpaceSaver air heater (right)

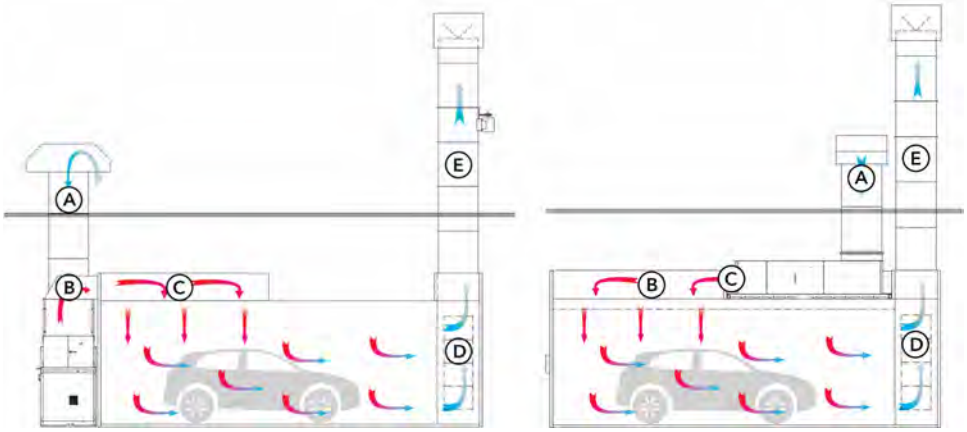

A: *Intake Duct*
B: *Discharge duct*
C: *Intake plenum*
D: *Exhaust plenum (confined space)*
E: *Exhaust ductwork*

Figure 6. Semi-downdraft booth components with BT air heater (left) and SpaceSaver air heater (right)

WARNING
Before servicing, lockout/tagout the air heater, including the main electrical service and the main gas supply.

1. Inspect the intake and exhaust ductwork. If needed, scrape off any build-up; then sweep or vacuum it up. Dispose of build-up or other waste safely.

   WARNING
   Paint-contaminated items are flammable and may cause spontaneous combustion. Consult local authorities for proper storage and disposal requirements.

2. Inspect intake and exhaust plenum as necessary. If needed, scrape off any build-up; then sweep or vacuum it up. Dispose of build-up or other waste safely.
3. Inspect the air heater control panel housing. If needed, clean with a compressed air duster or vacuum.

Inspect and clean the air heater

CAUTION
Use care when touching the exterior of an operating motor or a motor that has just been shut down. Motors usually run hot and may be hot enough to be painful or cause injury.

WARNING
Before servicing, lockout/tagout the air heater, including the main electrical service and the main gas supply.

1. Check that the fan inlet and intake areas (approaches to the ventilator) are free from obstructions and clean.
2. Check the fan, wheel, other moving parts, and the inlet, especially if the blower is installed in a corrosive or dirty environment.

   Oil, dust, or overspray may occasionally accumulate on the fan, causing an imbalance. For smooth and safe operation, inspect and clean the wheel and other moving parts as needed.

3. *If applicable,* check air heater belt tension.

   NOTE
   For instructions, see “Check air heater belt tension (SpaceSaver)” (page 42)

4. *If applicable,* check air heater V-belt alignment.

   NOTE
   For instructions, see “Check V-belt drive alignment” (page 39)

5. After performing the above maintenance checks, ensure that all fasteners are tight.
6. When the booth has been returned to a safe operating state, remove the locks and restore power.

Inspect and clean the exhaust fan

CAUTION
Use care when touching the exterior of an operating motor or a motor that has just been shut down. Motors usually run hot and may be hot enough to be painful or cause injury.

WARNING
Before servicing, lockout/tagout the exhaust fan, including the main electrical service and the main gas supply.

1. Check that the fan inlet and the intake areas (the approaches to the exhaust fan) are clean and free from obstructions.
2. Check the bearings for excessive play and replace, if necessary.

   NOTE
   In most cases, the motors are permanently lubricated.
3. Scrape off any accumulated oil and dust from the fan, inlet, wheel, and other moving parts. Dispose of any waste safely.

   NOTE
   Accumulated oil and dust can cause an imbalance in the fan's rotation. If the blower is installed in a corrosive or dirty location, you may need to inspect and clean the wheel and other moving parts more often than monthly.
4. *If applicable:* Check the fan belt tension; adjust the tension, if necessary. (See "Adjust belt tension" (page 38).)

Yearly maintenance

This section contains tasks that should be performed on a yearly basis. Increase or decrease frequency as needed for specific operating conditions and use of booth.

NOTE
Once each year, perform these tasks in addition to the monthly maintenance tasks.

If applicable: Inspect and clean an air heater with a standard burner

Scope: Perform this procedure if the air heater has a standard burner. If the air heater has a Low NOx burner, complete "*If applicable:* Inspect and clean an air heater with a Low NOx burner" (page 30) instead.

Once each year, perform these tasks in addition to the monthly air heater maintenance tasks.

WARNING
Before servicing, lockout/tagout the air heater, including the main electrical service and the main gas supply.

CAUTION
Use care when touching the exterior of an operating motor or a motor that has just been shut down. Motors usually run hot and may be hot enough to be painful or cause injury.

1. *If applicable:* Inspect the air heater fan belt for wear; replace any torn or worn belts.

   NOTE
   For instructions, see "Replace fan belts" (page 39).

2. Inspect the bolts and screws for tightness. Tighten them as necessary.
3. Inspect the motor for cleanliness. Remove dirt and grease from the wheel and housing to prevent imbalance and damage.
   a. Clean exterior surfaces only.
   b. Use a rag to remove dust and grease from the motor housing to ensure proper motor cooling.
   c. Remove dirt and grease from the wheel and housing to prevent imbalance and damage.
4. Use soapy water or a gas detector to check for bubbles caused by a gas leak. Seal any leaks, if present.
5. Clean both sides of the stainless-steel burner plates with a stiff wire brush to remove any soot or other crud.

   NOTE
   All of the burner plate holes must be clear so air can pass through them unrestricted.

6. Inspect the burner plates for cracking. Some cracking between one or two holes is normal. If the cracking is more extensive, replace the affected plates.
7. Use the wire brush to remove rust and foreign material from the burner orifice area.
8. Clean the burner gas and air ports and remove debris; then use compressed air or a vacuum to remove any debris from the manifold.

NOTE
If needed, use a piece of wire or drill bit to clean the ports:

- **Gas port:** Drill size 1/8-inch (0.125 inch)
- **Air port:** Drill size 42 (0.093 inch)

9. Inspect the spark rod.
   - The tip should be clean and free of dirt and carbon. If not clean, replace the spark rod.
   - The porcelain must be intact. If the porcelain is cracked, replace the spark rod with Spark Plug, GFS part number 117-208.

     NOTE
     This part includes the spark rod, flame sensor, and pilot line entry to the burner.
10. Pull the flame rod.
    - The metal rod should be clean and free of dirt and carbon. If needed, either replace the flame rod, or clean the rod with steel wool and wipe with a clean paper towel. Avoid touching the flame rod while cleaning.
    - The porcelain must be intact. If the porcelain is cracked, replace the flame rod.

If applicable: Inspect and clean an air heater with a Low NOx burner

Scope: Perform this procedure if the air heater has a Low NOx burner. If the air heater has a standard burner, complete "*If applicable:* Inspect and clean an air heater with a standard burner" (page 29) instead.

Once each year, complete these tasks in addition to the monthly air heater maintenance tasks.

WARNING
Before servicing, lockout/tagout the air heater, including the main electrical service and the main gas supply.

CAUTION
Use care when touching the exterior of an operating motor or a motor that has just been shut down. Motors usually run hot and may be hot enough to be painful or cause injury.

1. *If applicable:* Inspect the air heater fan belt for wear; replace any torn or worn belts.

   NOTE
   For instructions, see "Replace fan belts" (page 39).
2. Inspect the bolts and screws for tightness. Tighten them as necessary.
3. Inspect the motor for cleanliness. Remove dirt and grease from the wheel and housing to prevent imbalance and damage.
   a. Clean exterior surfaces only.
   b. Use a rag to remove dust and grease from the motor housing to ensure proper motor cooling.
   c. Remove dirt and grease from the wheel and housing to prevent imbalance and damage.
4. Remove the flame sensor wire, spark cable, and wiring harness attached to the blower.

5. Loosen the union between the ratio regulator zero governor valve and blower to inspect the burner inlet.
6. Loosen the four 1/2-inch bolts attaching the burner to the heater to remove the burner; then, inspect heat chamber and burner head for cracks.
7. Remove the flame sensor and spark rod by loosening two nuts holding the ignition and flame sensing assembly. Then, inspect the spark rod.
   - The tip should be clean and free of dirt and carbon. If not clean, replace the spark rod.
   - The porcelain must be intact. If the porcelain is cracked, replace the spark rod (GFS part number 908513_5246-43).
8. Inspect the flame sensor.
   - The metal rod should be clean and free of dirt and carbon. If needed, either replace the flame sensor, or clean the sensor with steel wool and wipe with a clean paper towel. Avoid touching the flame sensor while cleaning.
   - The porcelain must be intact. If the porcelain is cracked, replace the flame sensor.

If applicable: Inspect the cycle damper (BT and GUL)

1. Remove the filter access door.
2. Remove the air heater intake filters.
3. Inspect the cycle dampers, pivots, and linkage for damage. Replace components if necessary.
4. Ensure the cycle damper is free to rotate to the fully closed position.
5. Replace the air heater intake filters.
6. Replace the filter access door.

If applicable: Inspect the recirc and intake air dampers (SpaceSaver)

1. Remove the gas train access door and the filter access door.
2. Remove the air heater intake filters.
3. Inspect the intake air damper for damage.
4. Inspect the recirculation air damper for damage, and ensure it is free to rotate to the fully closed position.
5. Replace the air heater intake filter.
6. Replace the filter access door and the gas train access door.

If applicable: Test for valve leaks

Scope: This procedure applies only to air heaters with standard burners.

This leak test checks the external sealing and valve seat sealing capabilities of the DMV automatic safety shutoff valve. Only qualified personnel should perform this test.

The test requires the following:

- Test nipples installed in the downstream pressure tap port of each automatic safety shutoff valve
- Transparent glass of water filled at least 1 inch from the bottom
- Leak test tube: aluminum or copper 1/4-inch rigid tube with a 45 degree cut at the end
- All-purpose liquid leak detector solution

Perform these steps to test for valve leaks.

1. With the upstream ball valve open, the downstream ball valve closed, and both valves are energized, apply an all-purpose liquid leak detector solution to the areas indicated in the illustration below.
   - Any accessories mounted to the safety valve
   - All gas piping and gas components downstream the equipment isolation valve
   - Inlet and outlet gas piping of the automatic safety shutoff valve.

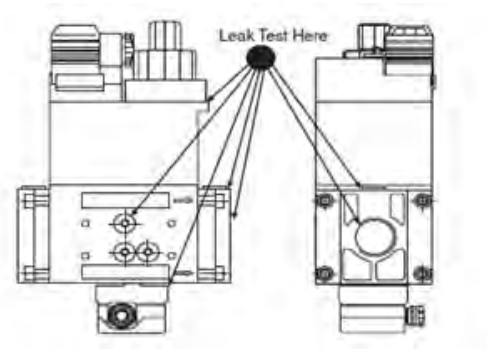

   The presence of bubbles indicates a leak, which needs to be fixed before proceeding. Replace the valve, reassemble, and retest for bubbles.
2. Remove all power to the burner system, and verify that both automatic safety shutoff valves are closed.
3. Close the upstream and downstream manual ball valve.
4. Using a screwdriver, slowly open the V1 test nipple (port 2) by turning it counter clockwise to depressurize the volume between the two valves; then connect the 1/4-inch flexible hose to the test nipple.

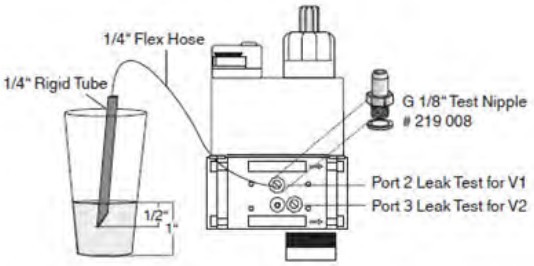

5. Slowly open the upstream manual ball valve; then allow time for potential leakage to charge the test chamber before measuring the valve seat leakage.
6. Immerse the 1/4-inch tube vertically 1/2-inch (12.7 mm) below the water surface. If bubbles emerge from the 1/4-inch tube and after the leakage rate has stabilized, count the number of bubbles appearing during a 10 second period. (See table below for allowable leakage rates.)

Type	Allowable Valve Seat Leakage up to 7 PSI inlet	Air	# of Bubbles in 10 s Natural Gas	LP
DMV D(LE) 701/622	239 cc/hr	5	6	4
DMV-D(LE) 702/622	464 cc/hr	9	11	7
DMV-D(LE) 703/622	464 cc/hr	9	11	7

IMPORTANT
If leakage values are exceeded, replace valve immediately.

7. Repeat the same procedure for valve V2 (port 3). (Energize terminal 2 on the DIN connector to open valve 1.)
8. Verify that the downstream manual ball valve is closed and both automatic safety shutoff valves are de-energized.
9. Remove the flexible hose, and close all test nipples.
10. With the upstream manual ball valve open, energize both automatic safety shutoff valves.
11. Use soapy water to check all test nipples to ensure that there are no leaks.
12. If no leakage is detected, de-energize all automatic safety shutoff valves, and open the downstream manual ball valve.

If applicable: Check the gas pressure switches

Check the low-pressure and high-pressure switches once a year for proper operation.

Low-pressure gas switch

Perform these tasks to check the resistance of the low-pressure switch both in normal operation and in a fault state.

NOTE
A resistance of more than 1.0 ohm indicates that the switch contacts are starting to either corrode or carbonize.

1. Connect a meter capable of reading +/- 0.1 ohms to the NO and COM contacts.

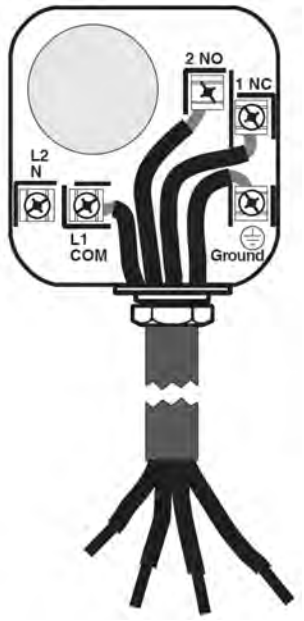

2. Measure the resistance. If the resistance is more than 1.0 ohm, remove the switch from service.
3. Connect the meter to the NC and COM contacts.
4. Cause a low-pressure fault condition using one of methods below:

   NOTICE
   Do not simulate fault conditions while the burner is firing.

   - Turn the pressure switch set point counter-clockwise until the switch trips.
   - De-pressurize the volume of gas the low-pressure gas switch is sensing.
     - For FRI/6 regulators, open the side tap on the opposite side of the FRI/6 regulator.
     - For DMV and MBC safety shutoff valves, open the port 1 pressure tap.
5. When the fault occurs, measure the resistance. If the resistance is more than 1.0 ohm, remove switch from service.
6. Allow the burner to go through a startup sequence, and then verify that the burner faults and is not allowed to light.
7. When testing is complete, close all pressure test points used.
8. Open the upstream ball valve SLOWLY to allow gas pressure to gradually re-enter the system.

   NOTICE
   Opening the upstream ball valve too fast can permanently damage the pressure switch.

High-pressure gas switch

Perform these tasks to check the resistance of the high-pressure switch both in normal operation and in a fault state.

NOTE
A resistance of more than 1.0 ohm indicates that the switch contacts are starting to either corrode or carbonize.

1. Connect a meter capable of reading +/- 0.1 ohms to the NC and COM contacts.

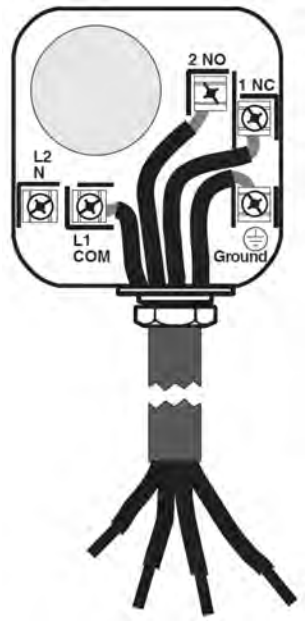

2. Measure the resistance. If the resistance is more than 1.0 ohm, remove the switch from service.
3. Connect the meter to the NO and COM contacts.
4. Cause a high-pressure fault condition using one of methods below:

   NOTICE
   Do not simulate fault conditions while the burner is firing.

   - Turn the pressure switch set point clockwise until the switch trips.
   - Pressurize the volume of gas the high-pressure gas switch is sensing by closing the downstream ball valve and open the port 3 tap.
5. When the fault occurs, measure the resistance. If the resistance is more than 1.0 ohm, remove the switch from service.
6. Allow the burner to go through a startup sequence, and then verify that the burner faults and is not allowed to light.
7. When testing is complete, close all test taps (ports), and then open downstream ball valve.

General service procedures

This section contains procedures that can be performed as needed to correct problems or as directed by the preventive maintenance schedules in “Daily maintenance” (page 16), Weekly Maintenance, “Monthly maintenance” (page 26), and “Yearly maintenance” (page 29).

Replace a defective bulb

NOTE
Perform this task if a specific light bulb is burned out or is noticeably dimmer than the other bulbs.

WARNING
Before servicing, lockout/tagout the main electrical service to the booth.

1. Remove any protective covering from the light whose bulb is being replaced:
   - **If you use Lens Protector:** Remove the Lens Protector plastic sheet.
   - **If you use Booth Shield:** Score around the light and peel off the Booth Shield covering.
2. Removing the eight (6 mm x 20 mm) cap-head screws that secure the light cover to the panel.

   NOTE
   Make sure to support the light cover when removing the last screws.
3. Pull the light cover away from the panel and place the cover in a safe place.

   NOTE
   If you do not use a protective covering on the lights, you might have to clean overspray from the light cover and panel before you can remove the light cover.
4. Rotate the tube 90 degrees to free the bulb from the lamp holder and remove the burned-out light bulb.

   NOTE
   Two spring-loaded holders keep the tube in place.
5. Replace the bulb by pushing one end of the new tube into one of the two spring-loaded holders, sliding the other end into the other holder, and then rotating the tube 90 degrees to lock in place.
6. Replace the light cover, ensure the alignment of the interlocking safety switch, and then secure it with the eight (6 mm x 20 mm) cap-head screws.
7. Once all light covers have been installed and the booth is safe to operate, remove the lockout/tagout and apply power to the booth.
8. Verify that all light bulbs illuminate.
9. *If applicable,* apply a fresh protective covering over the light.

Replace the protective light covering

Scope:

- If brightness is diminished but you do *not* use a protective covering on the lights, use a non-ferrous, non-sparking scraper to remove overspray buildup from the lights.

- Perform the task below if the brightness of the lights seems diminished overall *and* if you use a protective covering on the booth lights.

NOTE
GFS recommends that you use Light Fixture Lens Protector or GFS Booth Shield to protect your booth lights from overspray. Lens Protector is a plastic peel-off film; Booth Shield is a peelable coating. Both products are available from your local distributor or from the GFS Parts Department. For more information, see “Accessories” (page 45).

1. Remove the protective covering from all lights:
   - **If you use Lens Protector:** Remove the Lens Protector plastic sheet.
   - **If you use Booth Shield:** Score around the edges and peel the clear Booth Shield covering off the surfaces.
2. Discard the used covering.
3. Apply a fresh layer of protective covering over all the lights:
   - **If you use Lens Protector:** Apply a new plastic sheet.
   - **If you use Booth Shield:** Reapply the clear Booth Shield and wait for it to dry.

Adjust belt tension

Belt tension is very important to the proper operation of a fan and to the service life of a V-belt drive. The belts on a new fan are properly adjusted; however, all V-belts stretch in the first few hours of operation. It is necessary to readjust the belt tension after eight hours of running. After approximately 100 hours of running, the belts should be adjusted again. Thereafter, tracking the number of hours the booth is in use and periodic inspection are recommended so belts may be adjusted or replaced when necessary.

WARNING
Operating drives without guards in place can result in severe injury or death. If you remove any guards, make sure you replace them before removing locks and restoring power.

WARNING
Before servicing, lockout/tagout the main electrical service to the device.

CAUTION
Do not tighten belts by changing the setting of the motor pulley as this changes the fan speed and may damage the motor.

NOTICE
Over-tightening results in too much tension, causing excessive belt wear and noise. Under-tightening results in too little tension, causing slippage at start-up and uneven wear.

- **To service an air heater fan:** Disconnect and lock out the main electrical service to the air heater.
- **To service an exhaust fan:** Disconnect and lock out the main electrical service to the exhaust fan.

1. Measure the belt span as illustrated below.

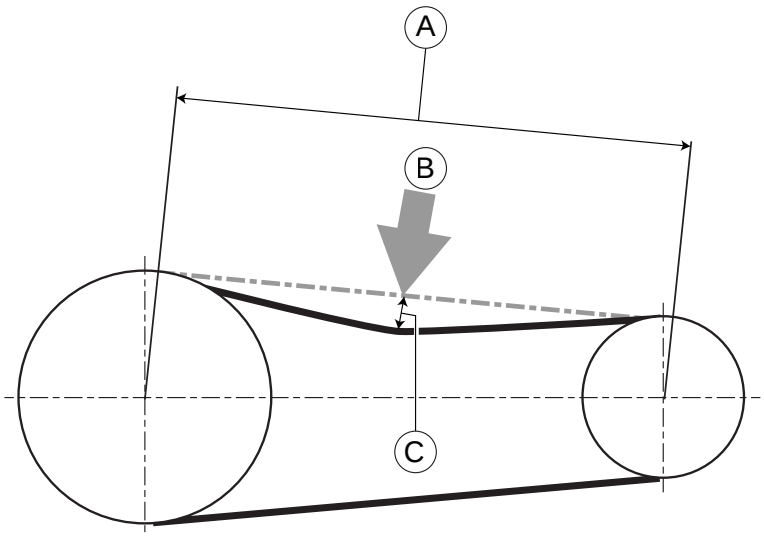

A: *Span length*
B: *Force*
C: *Deflection*

2. Calculate the required deflection by multiplying the belt span by 1/64.

   For example, if the belt span is 32 inches, the belt deflection equals 1/2 inch (32 inches x 1/64 = 1/2 inch).

3. Apply the force from the following table evenly across the width of the belt at the center of the belt span and measure the deflection.

   NOTE
   A strip of keystock or similar material may be used to distribute the force evenly across the belt width.

   Table 4. Belt deflection force

Belt type	New belt force (measured in pounds)	Used belt force (measured in pounds)
B	6.7-9.4	4.5-6.3

4. With the force still applied, measure the actual belt deflection. Adjust the belt tension if the measured belt deflection is greater than the calculated deflection.
5. When the booth has been returned to a safe for operation state, remove locks and restore power.

Replace fan belts

WARNING
Before servicing, lockout/tagout the fan, including the main electrical service.

1. Loosen the motor hold-down bolts and move the motor toward the fan. (This is done by turning a jackscrew which is a part of the motor base on models having larger motors.) The belt may be slipped off the motor sheave and then easily removed from the sheave on the blade shaft.
2. Check the numbers on the belt and make the replacement with a belt having the same length and section.

3. Adjust the motor outward to tighten the belt (see “Adjust belt tension” (page 38)) and tighten the motor hold-down bolts. Be sure that the motor is not cocked at an angle and that the end face of the motor sheave is parallel to the end face of the driven sheave.
4. Adjust the belt tension (see “Adjust belt tension” (page 38)).
5. After performing the above maintenance, check that all fasteners are tight.
6. When the booth has been returned to a safe for operation state, remove locks and restore power.

Check V-belt drive alignment

Proper alignment and balance of the V-belt is important; check the following items to ensure smooth fan operation.

1. Check that the fan and motor sheaves are in axial alignment; adjust sheaves as required.

   NOTE
   Shafts are parallel in both the vertical and horizontal planes.

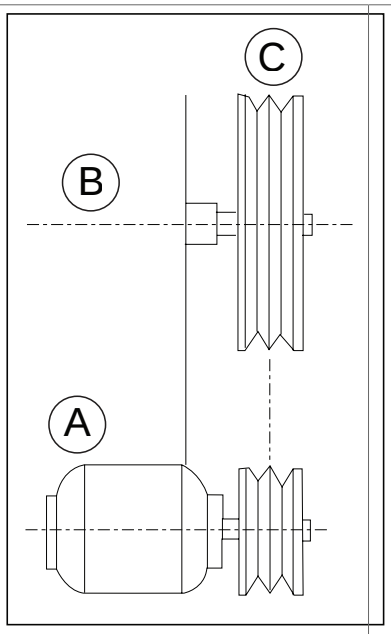

A: *Motor*
B: *Fan*
C: *Drive*

Side view (vertical alignment)

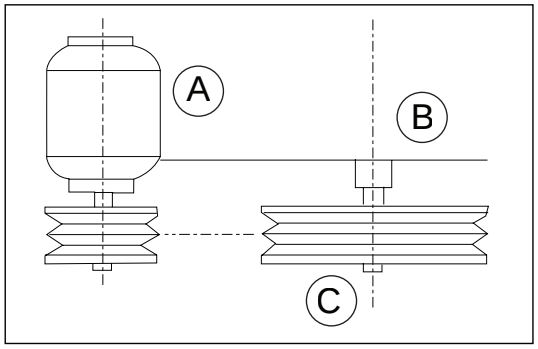

A: *Motor*
B: *Fan*
C: *Drive*

Top view (horizontal alignment)

2. Check that the fan motor sheaves are in radial alignment; adjust sheaves as required:
   - When sheaves are of equal width, align the sheaves with a straight-edge (inset A).
   - When sheaves are of unequal width, align the center of the sheaves (inset B).

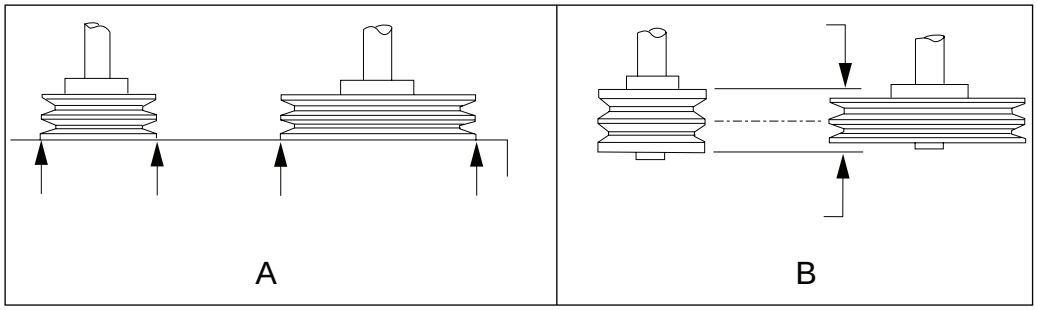

A: *Equal-width sheaves: Align to straight-edge touching sheaves at arrows*
B: *Unequal-width sheaves: Align to center of sheaves*

3. Verify that sheaves have no noticeable eccentricity.
4. If adjustments were made, check belts for proper tension.

   NOTE
   Belts that are either too loose or too tight cause vibration and excessive wear. (see “Adjust belt tension” (page 38), as applicable).

5. After all adjustments have been completed, check the complete assembly for smoothness of operation.

V-belt drive considerations

V-belt drives on GFS fans are purposely sized to handle considerably more load than would be necessary for normal drive design. This is done to prolong the life of the drive and provide for minimum maintenance. Belts should be replaced when they have obviously become worn, even though they are still operating. A badly worn belt will also cause undue sheave wear.

Replace belts when they show definite signs of wear; otherwise the sheaves will become worn to the point where they also must be replaced. Never put new belts on a badly worn sheave. This will reduce the capacity of the drive and cause excessive belt wear.

Most GFS fans are provided with an adjusting screw as a part of the motor base for easy setting of belt tension. However, small fans or fans using small horsepower motors may have only a slotted base plate.

When the belt tension is adjusted by moving a motor on a slotted base, be sure to block the motor tightly and squarely before tightening the hold-down bolts, keeping the motor sheave in line with the belt. The motor sheave must be parallel to and in line with the fan sheave.

When you replace belts on a multi-groove drive, be sure they are used in a matched set. If you are not sure whether the belts are matched, observe them in operation. The tight side should be perfectly straight and the belts should run smoothly and in line. The slack side should bow out and also be in line.

If one of the belts extends out considerably farther than another, it is an indication that the belts are not matched and should be changed. If there is only a slight difference, the normal stretching in the first hours of operation will equalize the belt lengths and the belts will be well matched.

Replace fan bearings (SpaceSaver)

Follow the assembly and alignment procedure when installing replacement bearings. Inspect the shaft for wear at the bearing mounting positions. The shaft diameter should not be less than the commercial ground and polished tolerances. Excessive undersizing results in rapid wear.

1. Slide the bearing onto the shaft with the bearing collar pointed away from the wheel and toward the end of the shaft. The head of the inverted socket-head capscrew fits in the short keyway. Make sure the shaft can expand without the end of the keyway hitting the screw head.
2. Confirm that the shaft is at the proper centerline height and the bearing is square with the shaft.
3. Confirm that the shaft and bearings are in proper alignment.
4. Bolt the bearing into position; then check the position of the shaft and bearing again.

Common causes of excessive vibration

- Damage in shipping and handling or poor installation may upset the unit's balance
- The support structure is not sufficiently rigid or level. Resonance in the ductwork or support structure amplifies vibration.
- Belt tension is too tight or too loose.
- The bearing locking collar or mounting bolts are loose.

- The blade set screw is loose.
- Material has accumulated on the blade.

Air heater service procedures

Reference: For detailed air heater service procedures, see the air heater owner's manual that shipped with your booth.

Check air heater belt tension (SpaceSaver)

WARNING
Operating drives without guards in place can result in severe injury or death. If you remove any guards, make sure you replace them before removing the locks and restoring power.

WARNING
Before servicing, lockout/tagout the air heater, including the main electrical service and the main gas supply.

CAUTION
Do not tighten the belts by changing the motor pulley setting, as this changes the fan speed and may damage the motor.

NOTICE
Over-tightening results in too much tension, causing excessive belt wear and noise. Under-tightening results in too little tension, causing slippage at start-up and uneven wear.

1. Calculate or measure the belt span as illustrated below.

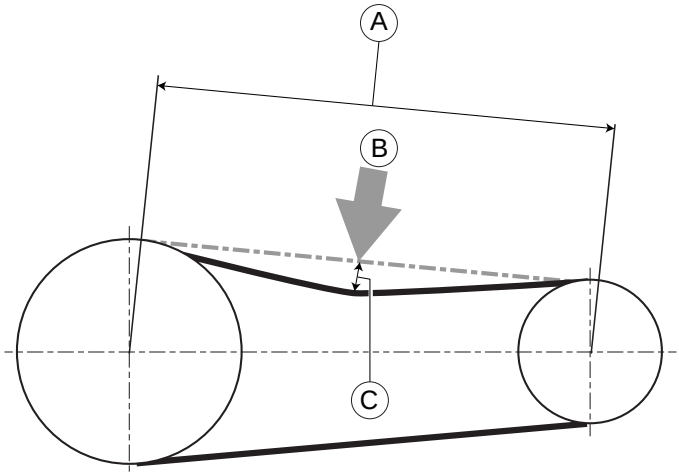

A: *Span length*
B: *Force*
C: *Deflection*

2. Calculate the required deflection by multiplying the belt span by 1/64.

   For example, if the belt span is 32 inches, the belt deflection equals 1/2 inch (32 inches x 1/64 = 1/2 inch).

3. Apply the force from the following table evenly across the width of the belt at the center of the belt span and measure the deflection.

   NOTE
   A strip of keystock or similar material may be used to distribute the force evenly across the belt width.

   Table 5. Air heater belt deflection force

Belt type	New belt force (measured in pounds)	Used belt force (measured in pounds)
B	6.7-9.4	4.5-6.3

4. With the force still applied, measure the actual belt deflection. Adjust the belt tension if the measured belt deflection is greater than the calculated deflection.
5. When the booth has been returned to a safe operating state, remove locks and restore power.

Reset the air heater flame safety control

If the flame safety control alarm light is on (locked out), manually reset the unit.

1. Reset the flame safety guard.
2. Reset warning on screen.

Reset the gas pressure switches

Units are equipped with manual reset high and low gas pressure switches. The burner will not operate if a switch is tripped. To reset a switch, follow the reset instructions provided on the top of the switch.

Reset the high temperature limit switch

Typically, two high temperature limit switches protect the system in the event a failure causing high temperature in the air heater blower cabinet or high blower discharge temperature. One device automatically resets when temperature falls under the device's setpoint. The second device requires manual reset after a high temperature fault. The booth uses one of the following types of manual reset, high temperature limit switches:

- **Honeywell:** Press the red button toward the bottom (on the face) of the limit device
- **Future Design:** Press the reset button.

NOTE
Either type can be reset with or without power applied to the booth.

NOTE
You may not feel any change in the device as you reset it.

Spare parts and accessories

Consumable parts

GFS recommends that you keep the following consumable parts available:

- One change of filters for each filter type:
  - Exhaust filters or exhaust filter media
  - Intake filters
  - Air heater filters
- One box of light bulbs
- One roll of seal

Table 6. Consumable Parts

Part Number	Description
Refer to the Cabin Equipment Specifications on the General Arrangement drawing	Intake and exhaust filters
FMP2336	Air heater filters (quantity of 4)
230-286B	LED light bulbs (quantity of 4)
R8550	Door sealing tape

Before ordering replacement parts, make sure you know the following:

- Serial number of your product
- Part number and description of the item you want to order
- Desired quantity of the item
- Purchase order number or credit card number
- Preferred shipping method (UPS, Federal Express, truck, air, etc.)
- Complete shipping and billing address

NOTE
Visit www.globalfinishing.com/parts-filters and the GFS Accessories Catalog for information about paint booth parts and components.

Accessories

Refer to the following table for commonly used accessories that can help keep your booth clean and organized.

Table 7. Accessories

Image	Name and description	Part number
	BoothBox 2™ The BoothBox 2 is a magnetic, double compartment cabinet and double spray gun holder, designed for the interior of paint booths. With the BoothBox 2, you can store commonly used supplies — tape, gloves, tack cloth — within arm's reach, enabling you to increase productivity while eliminating time-consuming trips in and out of the booth.	218-002
	Hose & Gun Hanger™ The Hose & GunHanger is a double spray gun holder and air hose hanger, designed for paint booths, prep areas, or mix rooms. It comes equipped with a hook for storing tape and other supplies.	218-013

Image	Name and description	Part number
	Single GunHanger™ The Single GunHanger is a magnetic spray gun holder designed to hold all types of spray guns and most types of air tools. A soft edge guard eliminates scratching of the spray gun or gun cup.	218-004
	4 GunHanger™ The 4 GunHanger is a magnetic, four-position spray gun holder for paint booths, prep areas, or mix rooms. The 4 GunHanger is also equipped with a hook for storing spray guns, tape and other supplies, allowing you to avoid clutter and keep objects off the floor.	218-011
	BoothBox Mini™ The BoothBox Mini is a magnetic, single compartment cabinet and double spray gun holder, designed for the interior of paint booths. With the BoothBox Mini, you can keep commonly used supplies — tape, gloves, tack cloth — close at hand, enabling you to increase productivity while eliminating time consuming trips in and out of the booth.	218-006

Image	Name and description	Part number
	Booth Shield® Booth Shield protects booth interiors and increases brightness, improving visibility and overall product quality. Booth Shield coatings are easy to apply and quickly dry on your paint booth's walls, lights, and floors to trap overspray and create a safer spraying environment.	**Walls:** • 236-067 (water-based wall prep; 1 gallon) • 236-061-5PL (wall prep; 5 gallons) • 236-068 (clear, water-based; 1 gallon) • 236-039-5PL (clear, water-based; 5 gallons) • 236-065 (white, water-based; 1 gallon) • 236-064-5PL (white, water-based; 5 gallons) • 236-064-55DM (white, water-based; 55 gallons) **Floor:** • 236-062 (water-based floor prep; 1 gallon) • 236-066 (white, solvent-based; 1 gallon) • 236-041-5PL (white, solvent-based; 5 gallons) • 236-063-55DM (white, solvent-based; 55 gallons)
	PIG® Grippy Mats PIG Grippy Mat Paint Booth Protective Floor Covering has a self-sticking backing to securely protect the booth floor, while also trapping overspray, dirt, dust and particles for better quality paint finishes and a safe, bright working environment.	217-952 (32-inch x 150-foot roll) 217-951 (32-inch x 100-foot roll) 217-950 (32-inch x 50-foot roll)
	Light Fixture Lens Protector This clear, cling-on plastic film has a 2-millimeter thickness and is easy to apply and replace. Rolls are available in three widths and provide a crystal-clear protective coating.	230-004 (18-inch x 100-foot roll) 230-210 (12-inch x 100-foot roll) 230-211 (Dispenser Handle)

Image	Name and description	Part number
	Booth Paper Easily replaceable, fire-retardant lining for paint booth walls and floors. Rolls of Booth Paper are available in varying widths to efficiently cover your booth and protect the surface from paint and contaminant buildup, while the exposed surface prevents the migration of dust and overspray.	217-081 (36-inch x 300-foot roll) 217-083 (60-inch x 300-foot roll) 217-084 (72-inch x 300-foot roll)
	DirtTrack Mat Prevent contaminants from entering the booth with GFS DirtTrack mats. Position the multilayered, adhesive mat in front of product or personnel doors to trap dirt and dust from shoes or tires. Once a sheet becomes soiled, it can be simply peeled off and discarded, leaving a fresh mat in its place.	217-240 (24-inch x 30-inch mats; 1 pad of 60 peelable sheets) 217-241 (36-inch x 60-inch mats; 1 pad of 30 peelable sheets)
	Filter Insertion Tool Used to secure intake filters into the filter grid.	217-050

Control panel

The control panel handles the booth's operating modes as well as the booth lighting and ventilation system. The ventilation system consists of booth exhaust fan(s) and an air heater with burner to supply fresh air to the booth.

For detailed information about using the control panel, see the operator manual for your control panel type:

- Engage® Operator Manual (GFS part number 239-058)
- LOGIC 3 Operator Manual (GFS part number 239-059)
- LOGIC 4 Operator Manual (GFS part number 239-060)